SCHEMATIC AND SMALL PARTS

TARMAC SL8

Performance Road Bicycle

CONTENTS

1. SYMBOLS LEGEND 1
2. BICYCLE INFORMATION 2
2.1. Tools required 2
2.2. Weight limits 2
2.3. Component compatibility 2
3. GEOMETRY 3
4. SPECIFICATIONS 5
5. EXPANDER PLUG 7
6. BRAKE HOSE ROUTING 9
7. FORK, BEARINGS, AND COMPRESSION RING 11
8. SL7 STEM HEADSET 13
8.1. SL7 Stem transition and spacer routing 15
8.2. SL7 Stem cable bat and handlebar routing 16
8.3. Handlebar and stem faceplate 17
9. ROVAL RAPIDE COCKPIT HEADSET 19
9.1. Roval Rapide cockpit transition and spacer routing 21
9.2. Roval Rapide cockpit handlebar routing 22
10. SPECIALIZED ACCESSORY MOUNT 23
11. ROVAL RAPIDE COCKPIT ACCESSORY MOUNT 24
12. SEATPOST 25
12.1. Di2 Battery (optional) 27
12.2. Seatpost wedge 29
12.3. Seatpost minimum / maximum insertion depths 31
13. SHIMANO DI2 CABLE ROUTING 33
13.1. Front derailleur hanger install 35
14. REAR DERAILLEUR HANGER 37
15. REPLACEMENT PARTS AND ACCESSORIES 38

SPECIALIZED BICYCLE COMPONENTS | 15130 Concord Circle, Morgan Hill, CA 95037 (408) 779-6229
0000198241_SC_R1 06/23

We may occasionally issue updates and addendum to this document. Please periodically check www.specialized.com or contact Rider Care to make sure you have the latest information. 877-808-8154

1. SYMBOLS LEGEND

WARNING! The combination of this symbol and word indicates a potentially hazardous situation that, if not avoided, could result in serious injury or death. Many of the warnings say "you may lose control and fall." Because any fall can result in serious injury or even death, we do not always repeat the warning of possible injury or death.

CAUTION: The combination of the safety alert symbol and the word CAUTION indicates a potentially hazardous situation that, if not avoided, may result in minor or moderate injury, or is an alert against unsafe practices.

The word **CAUTION** used without the safety alert symbol indicates a situation that, if not avoided, could result in serious damage to the bicycle or the voiding of your warranty.

IMPORTANT INFORMATION

TECH TIP

USE HIGH-QUALITY GREASE

DO NOT GREASE

USE HIGH-QUALITY CARBON ASSEMBLY PASTE

USE BLUE THREADLOCKER

USE GREEN THREADLOCKER

USE ANTI-SEIZE COMPOUND

USE TORQUE WRENCH

LEFT HAND THREAD BOLT

ASSEMBLY DIRECTION

ASSEMBLY PATH

ORDER OF OPERATION

CORRECT

INCORRECT

VIDEO GUIDE LINK

2. BICYCLE INFORMATION

2.1. Tools required

TOOL	SIZE / SPEC
Torque wrench	0 - 20 Nm / 0 - 177 in-lbf
Hex bits / sockets	2 mm, 2.5 mm, 3 mm, 4 mm, 5 mm, 6 mm
Cable / housing cutters	Tool for cutting cable, housing and hose to required lengths during assembly.
High-quality grease	–
Blue threadlocker	Loctite 243
High-quality carbon assembly paste	–

2.2. Weight limits

MODEL	CARGO (kg / lb)		STRUCTURAL (kg / lb)
	REAR	FRONT	
Tarmac SL8 (all models)	0 / 0	0 / 0	109 / 240

2.3. Component compatibility

COMPONENT	COMPATIBLE SIZES
Upper headset bearing	40.5 mm ID x 49.5 mm OD x 6.5 mm
Lower headset bearing	40.5 mm ID x 49.5 mm OD x 6.5 mm
Front thru-axle	12 mm x 100 mm
Rear thru-axle	12 mm x 142 mm
Min / max 2x chainring	34t - 42t / 48t - 55t
Min / max 1x chainring	46t - 52t
Min / max front rotor	160 mm / 160 mm
Min / max rear rotor	140 mm / 160 mm
Min / max tire	24 mm x 700c / 32 mm x 700c

CEN standards require a minimum of 6 mm of clearance between the frame/fork and the tires.

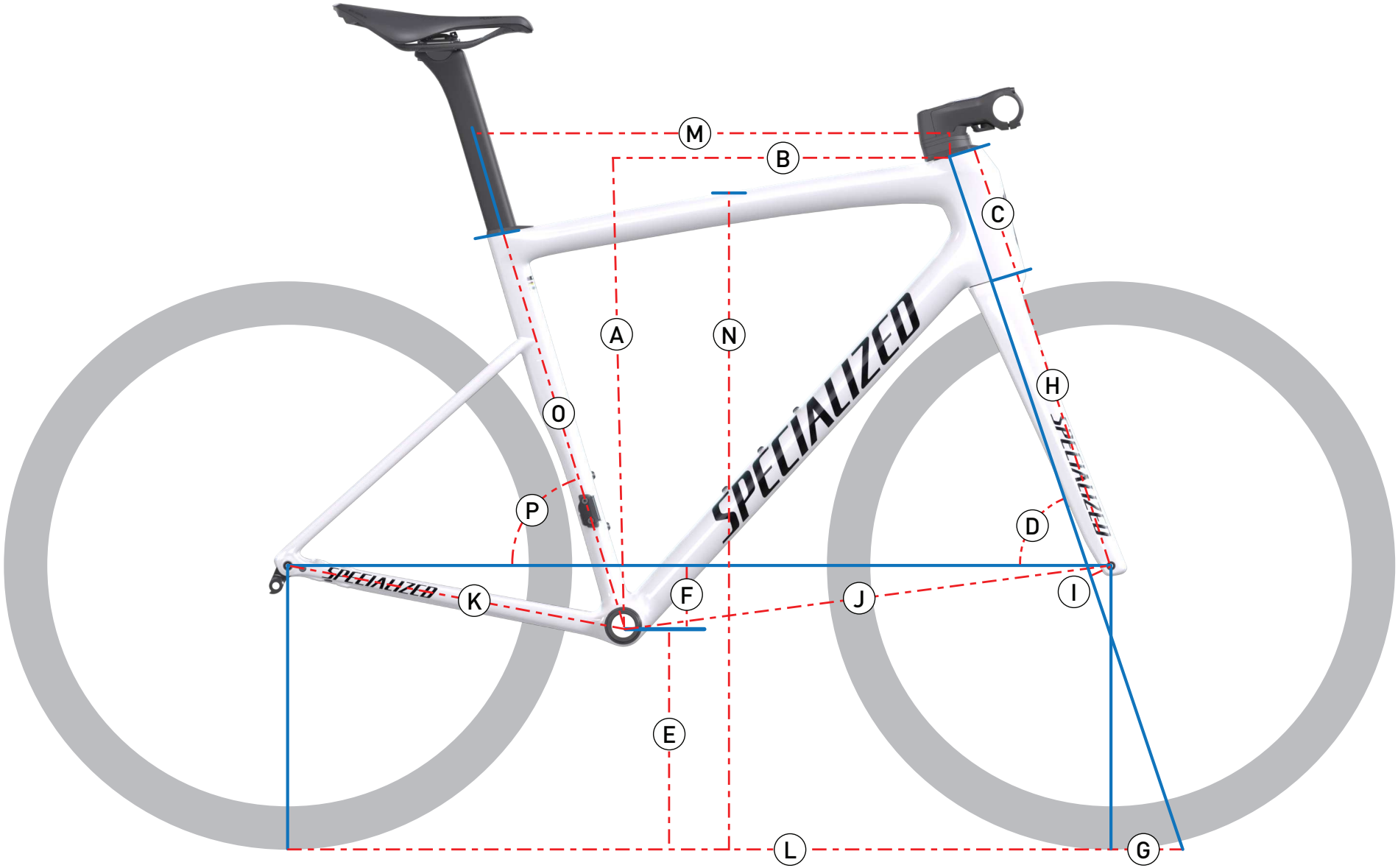
M
B
C
A
N
H
O
P
D
K
F
J
I
E
L
G

	FRAME SIZE	44	49	52	54	56	58	61
A	Stack (mm)	501	514	527	544	565	591	612
B	Reach (mm)	366	375	380	384	395	402	408
C	Head tube length (mm)	99	109	120	137	157	184	204
D	Head tube angle (°)	70.5	71.75	72.5	73	73.5	73.5	74
E	BB height (mm)	266	266	266	268	268	268	268
F	BB drop (mm)	74	74	74	72	72	72	72
G	Trail (mm)	71	63	58	58	55	55	52
H	Fork length (full) (mm)	370	370	370	370	370	370	370
I	Fork rake / offset (mm)	47	47	47	44	44	44	44
J	Front center (mm)	572	574	577	579	592	606	613
K	Chainstay length (mm)	410	410	410	410	410	410	410
L	Wheelbase (mm)	970	973	975	978	991	1005	1012
M	Top tube length, horizontal (mm)	496	508	531	540	562	577	595
N	Bike standover height (mm)	722	734	745	767	785	807	833
O	Seat tube length (mm)	433	445	456	473	494	515	545
P	Seat tube angle (°)	75.5	75.5	74	74	73.5	73.5	73
	Crank length (mm)	165	165	170	172.5	172.5	175	175
	Saddle width (mm)	155	155	155	143	143	143	143
	Seatpost length (mm)	300	300	300	380	380	380	380

The above table shows the standard geometry for the bicycles as shipped. Visit www.specialized.com for all possible geometry configurations.

4. SPECIFICATIONS

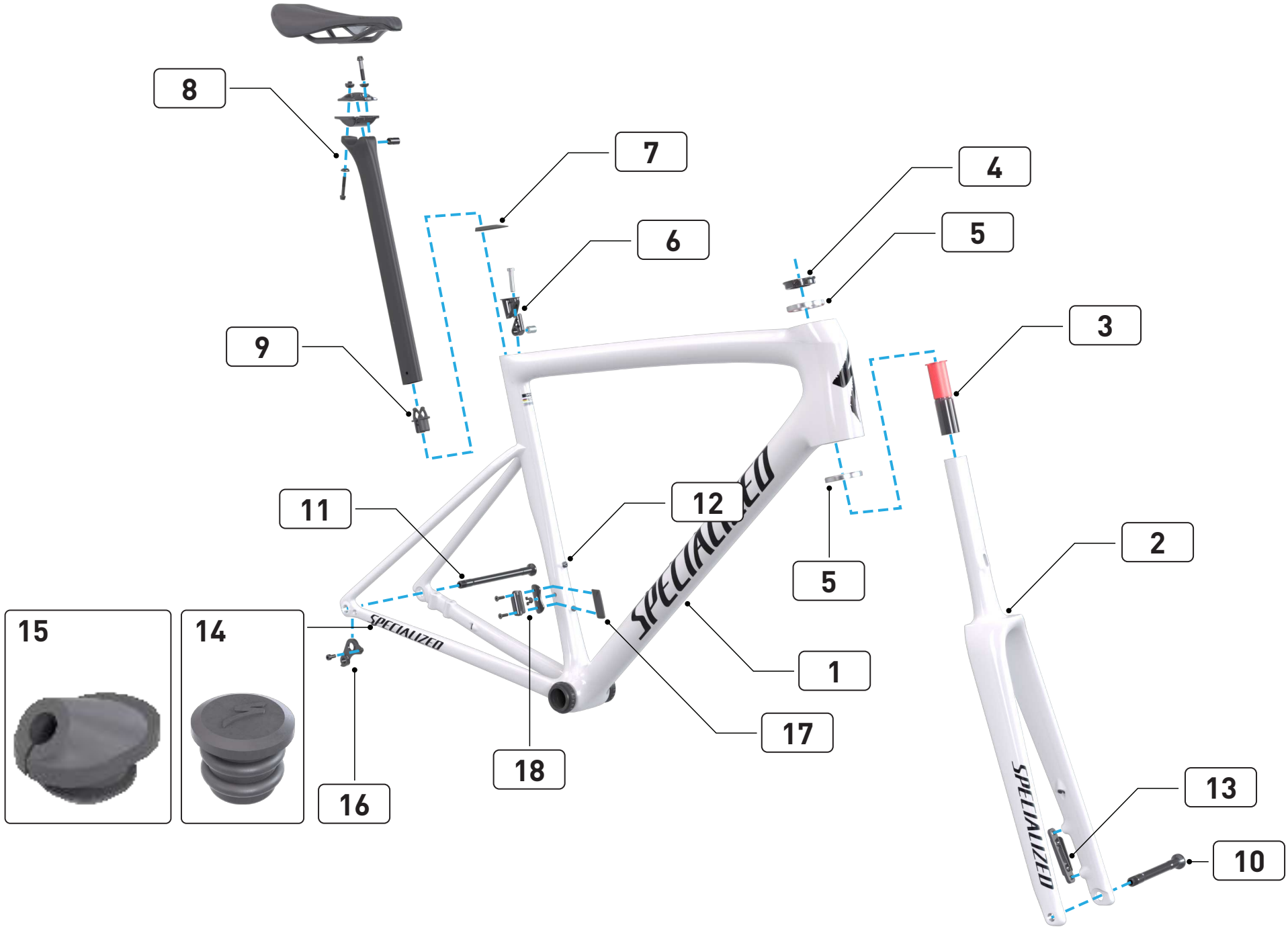

	DESCRIPTION		QTY	PART	COMPONENT SPEC	TOOL SIZE	TORQUE	
							Nm	in-lbf
1	**Frame**		1	-	listed in section **15. Replacement parts and accessories**	N/A	–	–
2	**Fork**		1	-	listed in section **5. Fork, bearings, and compression ring**	N/A	–	–
3	**Expander plug**		1	S222500002	M10 x 36 mm x 1.5 mm pitch	6 mm hex	5	44.2
4	**Compression ring**		1	S222500011	40.3 mm OD x 28.6 mm ID x 9 mm H	N/A	–	–
5	**Upper & lower headset bearing**		1	S162500005	49.5 mm OD x 40.5 mm ID x 6.5 mm x 45°	N/A	–	–
6	**Seatpost wedge**		1	S224700012	M6 x 30 mm x 1 mm pitch	4 mm hex	6.2	54.8
7	**Seatpost wedge cover**		1	S224700011	–	N/A	–	–
8	**Seatpost**	front bolt (15 mm offset)	1	28123-4105 28123-4115	M6 x 30 mm x 1 mm pitch (4 x 2 mm holes)	4 mm hex	3.1	27.4
		rear bolt (15 mm offset)	1		M5 x 30 mm x 0.8 mm pitch	4 mm hex	6.1	53.9
		single bolt (0 mm offset)	1	28123-4100 28123-4110	M6 x 37 mm x 1 mm pitch	5 mm hex	13.6	120.3
9	**Di2 Battery mount**		1	S224900036	–	N/A	–	–
10	**Front axle**		1	S200200010	12 mm x 100 mm	6 mm hex	15	132.7
11	**Rear axle**		1	S200200011	12 mm x 142 mm	6 mm hex	15	132.7
12	**Water bottle cage bolts**		3	S220500004	M5 x 16 mm x 0.8 pitch	3 mm hex	2.8	24.7
			2	S230500005	M5 x 10 mm 0.8 pitch	3 mm hex	2.8	24.7
13	**Fork brake flat mount adapter**		1	S200700001	–	N/A	–	–
14	**Wireless plug (SRAM shifting / 1x front chainring)**		2	S179900015	7 mm OD x 4 mm ID x 8.5 mm H	N/A	–	–
15	**Di2 Rear derailleur ICR grommet**		1	S226500010	6 mm OD x 2.4 mm ID x 8.5 mm H	N/A	–	–
16	**Rear derailleur hanger**		1	S206000001	M5 x 10 mm x 0.8 mm pitch	4 mm hex	4.5	39.8
17	**Front derailleur cover (1 x chainring)**		1	S201900002	–	N/A	–	–
18	**Front derailleur mounting kit**	M4 mounting bolts	2	S221900002	M4 x 14 mm x 0.7 mm pitch	2.5 mm hex	2	17.7
		front derailleur hanger	1		–	N/A	–	–
		front derailleur block off plate	1		–	N/A	–	–
		front derailleur grommet	1		7.5 mm OD x 5.5 mm ID x 9.2 mm H	N/A	–	–

Other service parts may be found in section 15. Replacement parts and accessories.

NOTES

5. EXPANDER PLUG

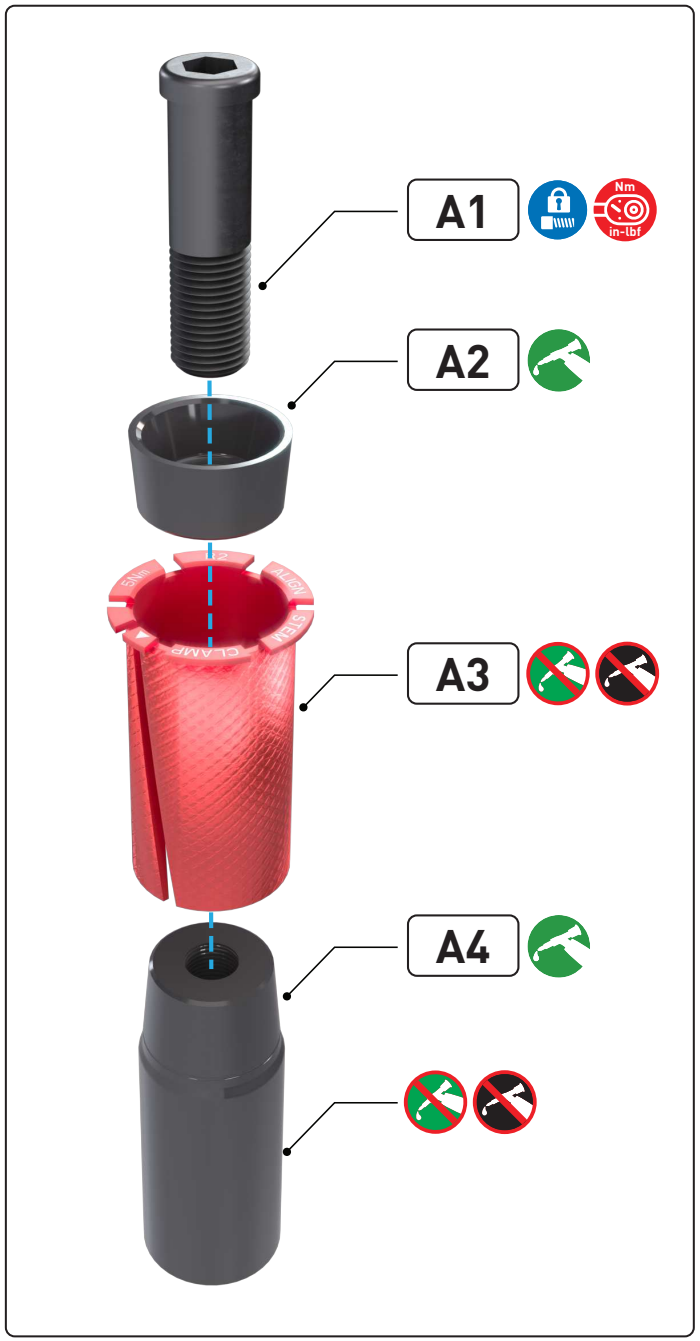

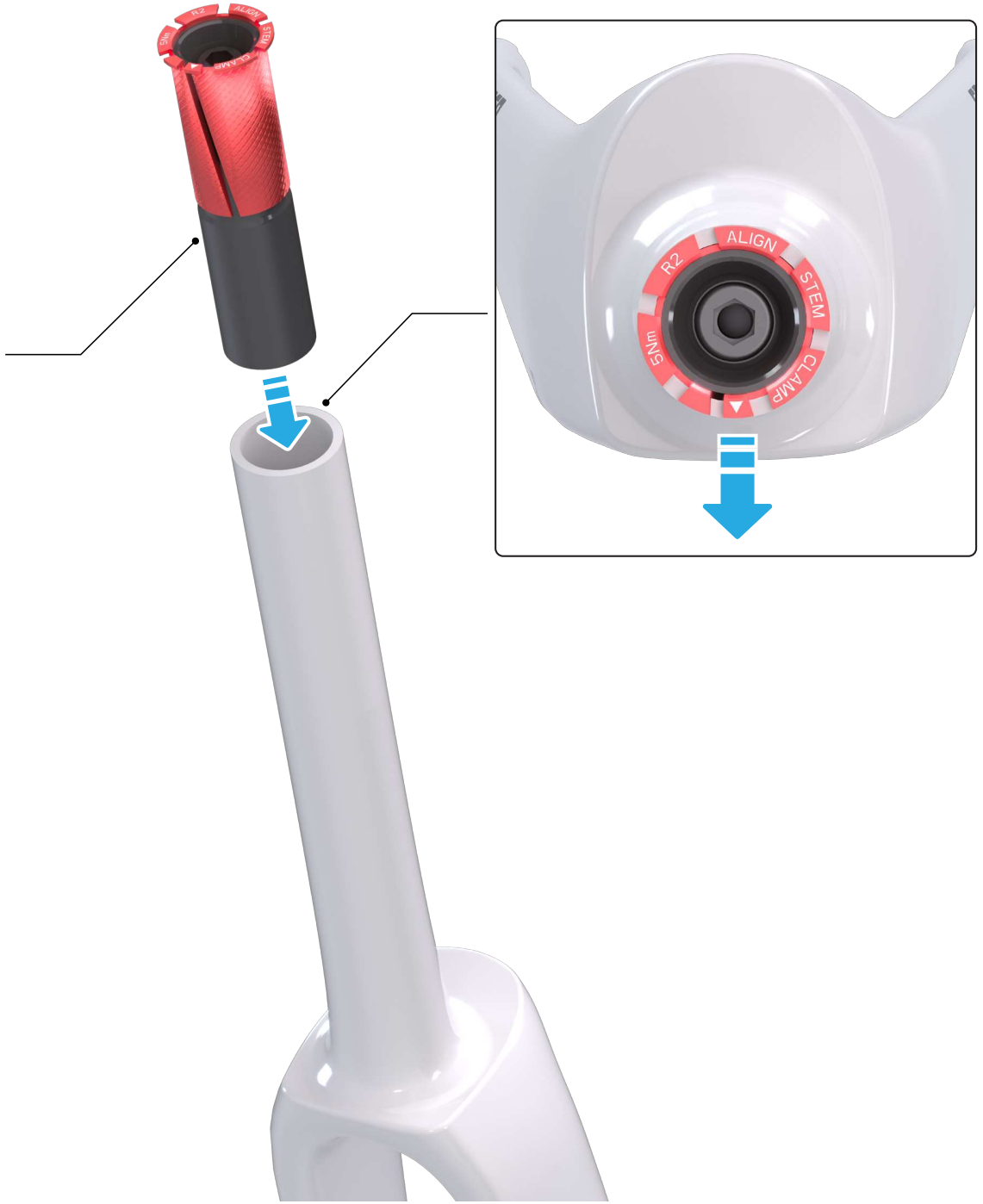

	DESCRIPTION		QTY	PART	COMPONENT SIZE	TOOL SIZE	TORQUE	
							Nm	in-lbf
A	**Expander plug**	1. expander bolt	1	S222500002	M10 x 36 mm x 1.5 mm pitch	6 mm hex	5	44.2
		2. expander washer	1		N/A	N/A	–	–
		3. expander sheath	1		N/A	N/A	–	–
		4. expander nut	1		N/A	N/A	–	–

NOTES

6. BRAKE HOSE ROUTING

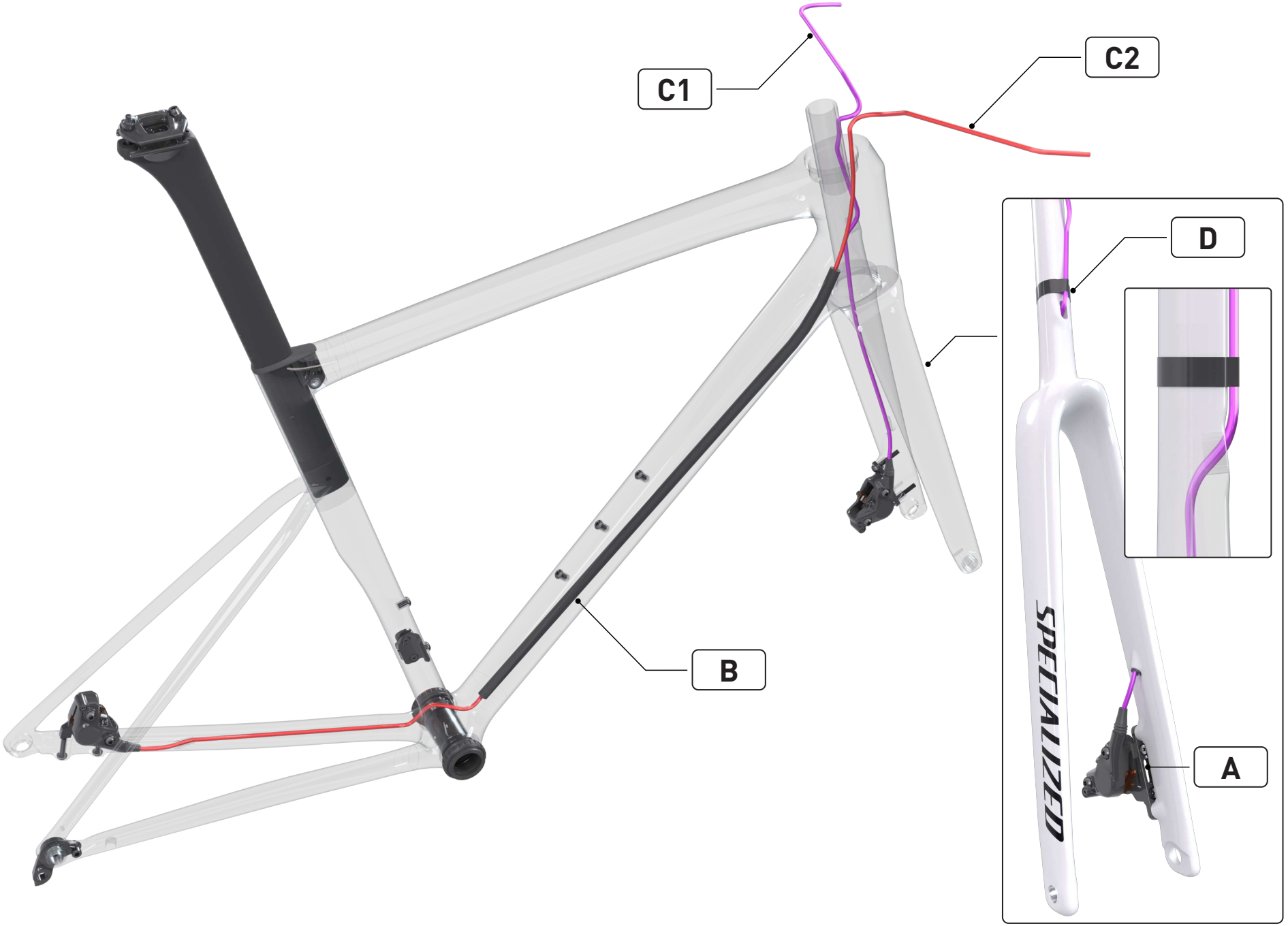

	DESCRIPTION		QTY	PART	COMPONENT SIZE	TOOL SIZE	TORQUE	
							Nm	in-lbf
A	**Fork brake flat mount adapter**	–	1	S200700001	N/A	N/A	–	–
B	**Foam sleeve "churro"**	at rear brake hose	1	S149900018	600 mm x 11 mm OD	N/A	–	–
C	**Brake hose**	1. front brake hose	1	–	1000 mm x 5 mm OD	N/A	–	–
		2. rear brake hose	1	–	1700 mm x 5 mm OD (S-Works models 1800 mm)	N/A	–	–
D	**Strong adhesive tape**	–	–	–	N/A	N/A	–	–

NOTES

7. FORK, BEARINGS, AND COMPRESSION RING

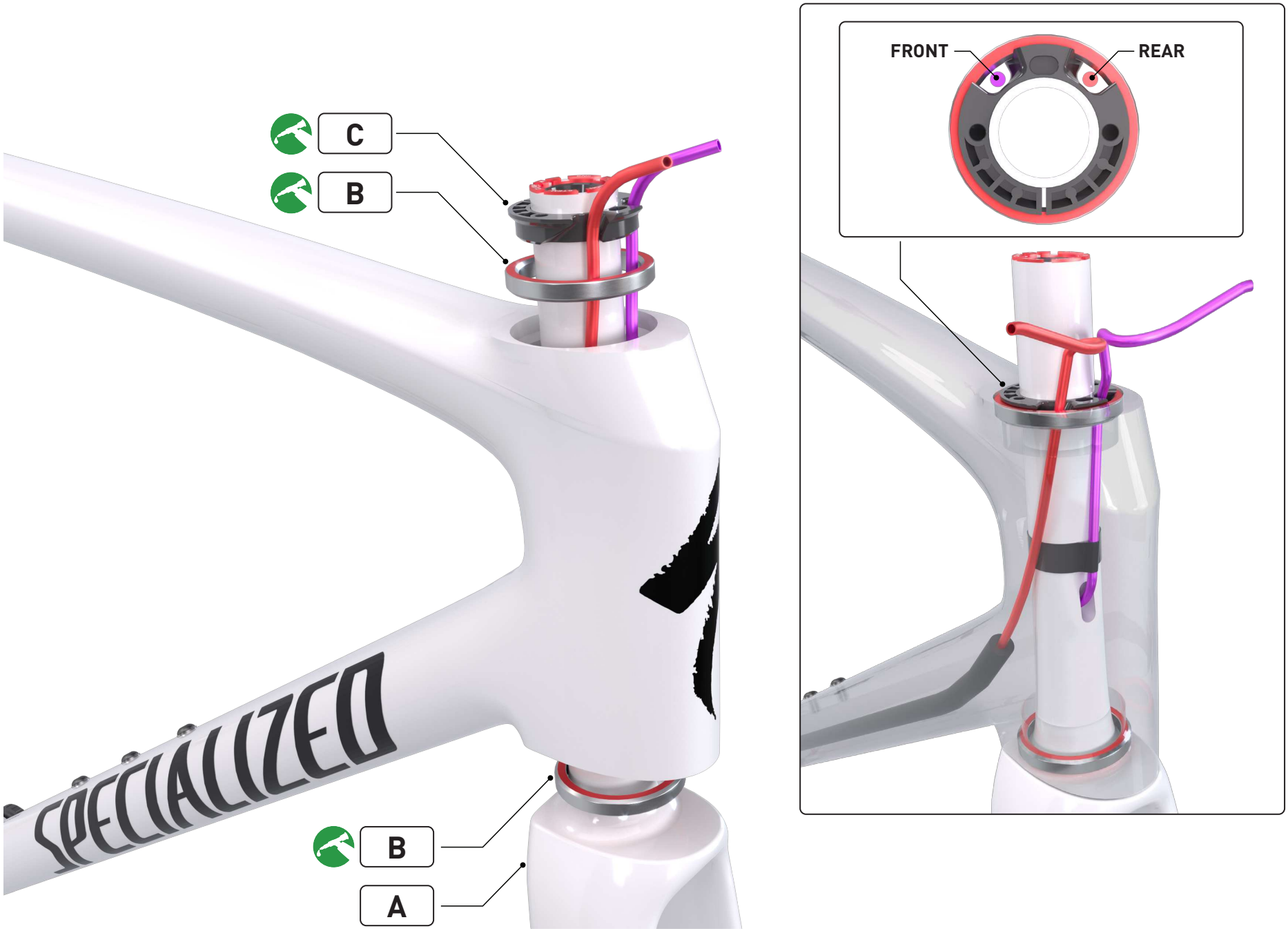

	DESCRIPTION		QTY	PART	COMPONENT SIZE	TOOL SIZE	TORQUE	
							Nm	in-lbf
A	**Fork**	–	1	–	see (**Aa**) (**Ab**)	N/A	–	–
B	**Headset bearing**	Upper headset bearing	1	S162500005	49.5 mm OD x 40.5 mm ID x 6.5 mm x 45°	N/A	–	–
		Lower headset bearing	1		49.5 mm OD x 40.5 mm ID x 6.5 mm x 45°	N/A	–	–
C	**Compression ring**	–	1	S222500011	40.3 mm OD x 28.6 mm ID x 9 mm H	N/A	–	–

	DESCRIPTION			PART
Aa	**MY24 SW Tarmac SL8 fork**	frame sizes 44, 49, 52	700c, TA, carbon, 12 x 100MM, disc, 47 mm offset, gloss black	S222300191
			700c, TA, carbon, 12 x 100MM, disc, 47 mm offset, satin carbon	S222300192
			700c, TA, carbon, 12 x 100MM, disc, 47 mm offset, fogtnt/grngstprl/redgstprl	S222300201
Ab	**MY24 SW Tarmac SL8 fork**	frame sizes 54, 56, 58, 61	700c, TA, carbon, 12 x 100MM, disc, 44 mm offset, gloss black	S222300189
			700c, TA, carbon, 12 x 100MM, disc, 44 mm offset, satin carbon	S222300190
			700c, TA, carbon, 12 x 100MM, disc, 44 mm offset, fogtnt/grngstprl/redgstprl	S222300200

NOTES

8. SL7 STEM HEADSET

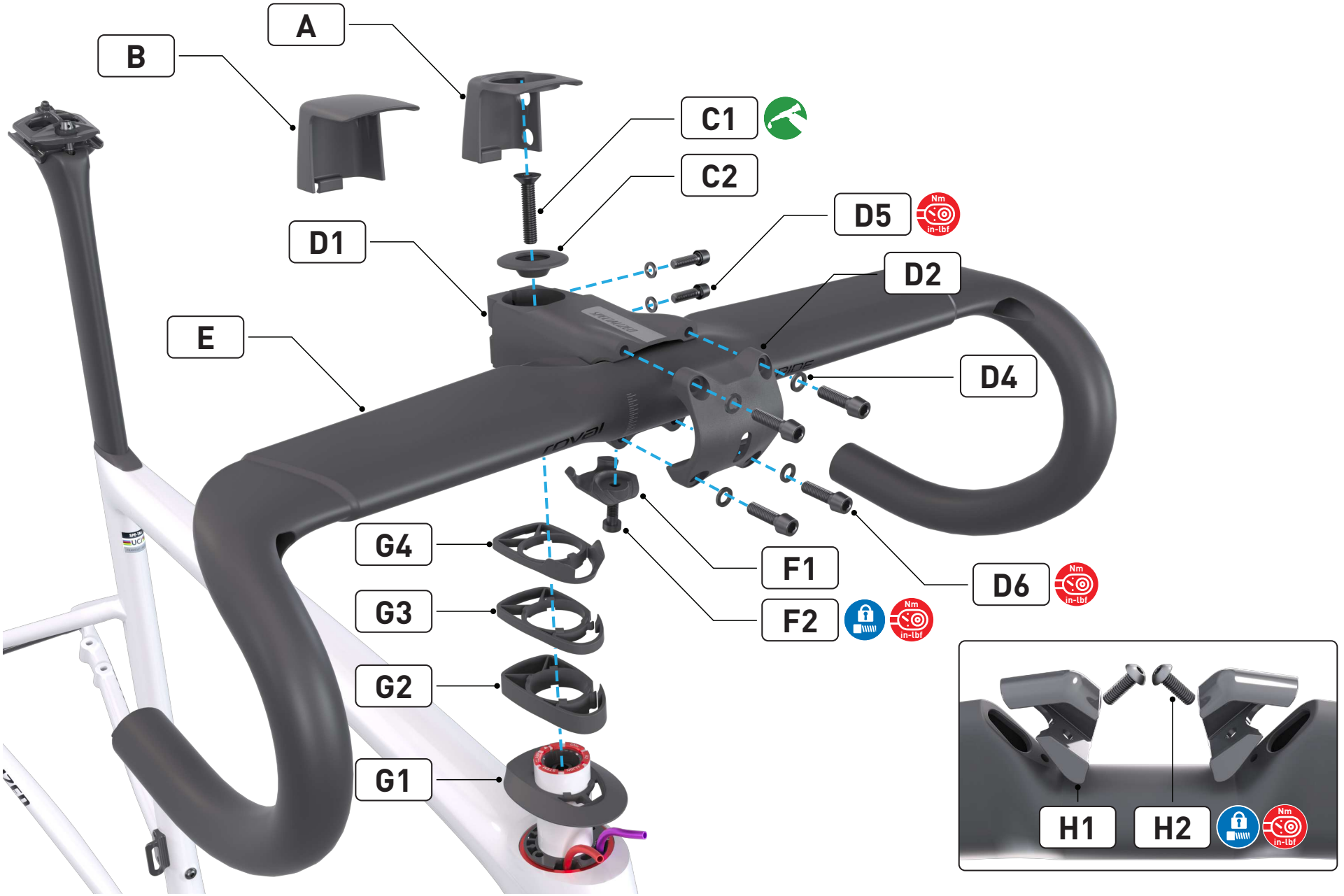

The SL7 stem and Roval Rapide cockpit have a maximum spacer/transition stack of 1 x lower transition spacer, 3 x 10 mm spacers, 1 x 5 mm spacer, and 1 x upper transition spacer.

	DESCRIPTION		QTY	PART	COMPONENT SIZE	TOOL SIZE	TORQUE	
							Nm	in-lbf
A	**SL7 Stem cover (open)**		1	S202500009	N/A	N/A	–	–
B	**SL7 Stem cover (closed)**		1	S202500009	N/A	N/A	–	–
C	**SL7 Stem top cap / bolt**	1. compression bolt	1	S182500012	M6 x 30 mm x 1 mm pitch	4 mm hex	–	–
		2. top cap	1		N/A	N/A	–	–
D	**SL7 Stem**	1. stem	1	see (**Dd**)	see (**Dd**)	N/A	–	–
		2. stem faceplate	1		N/A	N/A	–	–
		3. rivnut	1		M5 x 0.8 mm x 14.5 mm (uninstalled length)	N/A	–	–
		4. washer	6		8 mm OD x 5.2 mm ID x 0.8 mm H	N/A	–	–
		5. steerer clamp bolts	2		M5 x 17 mm x 0.8 mm pitch	4 mm hex	5	44
		6. faceplate bolts	4		M5 x 17 mm x 0.8 mm pitch	4 mm hex	5	44
E	**Handlebar**	Premetec 2117R-2 handlebar	1	21015-1205	(frame size)(44) 360 mm, (49) 380 mm, (51) 400 mm, (54) (56) 420 mm, (58)(61) 440 mm	N/A	–	–
		Roval Rapide handlebar	1	21022-0438	(frame size)(44)(49) 380 mm, (51) 400 mm, (54)(56) 420 mm, (58)(61) 440 mm	N/A	–	–
F	**SL7 Stem cable bat**	1. cable bat	1	S204800003	N/A	N/A	–	–
		2. cable bat bolt	1		M5 x 16 mm x 0.8 mm pitch	3 mm hex	3	26.5
G	**SL7 Stem headset / spacer kit**	1. lower transition	1	S222500009	N/A	N/A	–	–
		2. large spacer	3		10 mm	N/A	–	–
		3. small spacer	1		5 mm	N/A	–	–
		4. upper transition	1		N/A	N/A	–	–
H	**Handlebar clips**	1. handlebar clips	2	S189900105	N/A	N/A	–	–
		2. handlebar clip bolts	2		M4 x 12 mm x 0.7 mm pitch	2.5 mm hex	1	9
I	**Foam sleeve "churro"**	internal handlebar routing	2	S149900018	50 mm x 11 mm OD	N/A	–	–

	DESCRIPTION		PART
Dd	**SL7 Stem**	–	31.8 mm x 70 mm 6D
			31.8 mm x 80 mm 6D
			31.8 mm x 90 mm 6D
			31.8 mm x 100 mm 6D
			31.8 mm x 110 mm 6D
			31.8 mm x 120 mm 6D
			31.8 mm x 130 mm 6D
			31.8 mm x 110 mm 12D
			31.8 mm x 120 mm 12D
			31.8 mm x 130 mm 12D
			31.8 mm x 140 mm 12D

8.1. SL7 Stem transition and spacer routing

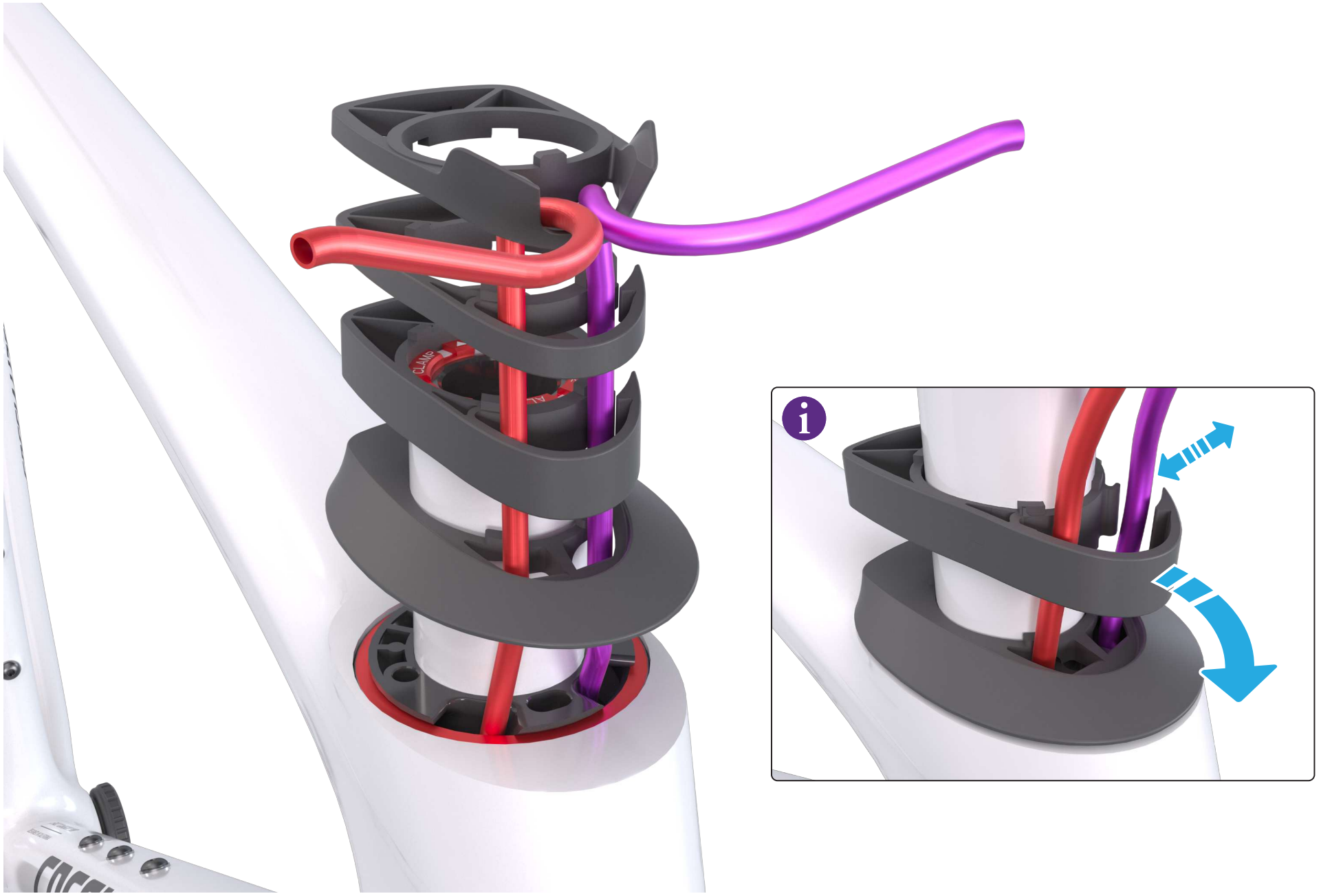

The spacers are split so they can be installed or removed to adjust stack height without removing the housings. To do this, engage the clip, install the spacer on the steerer tube, then vertically slide the clip together.

8.2. SL7 Stem cable bat and handlebar routing

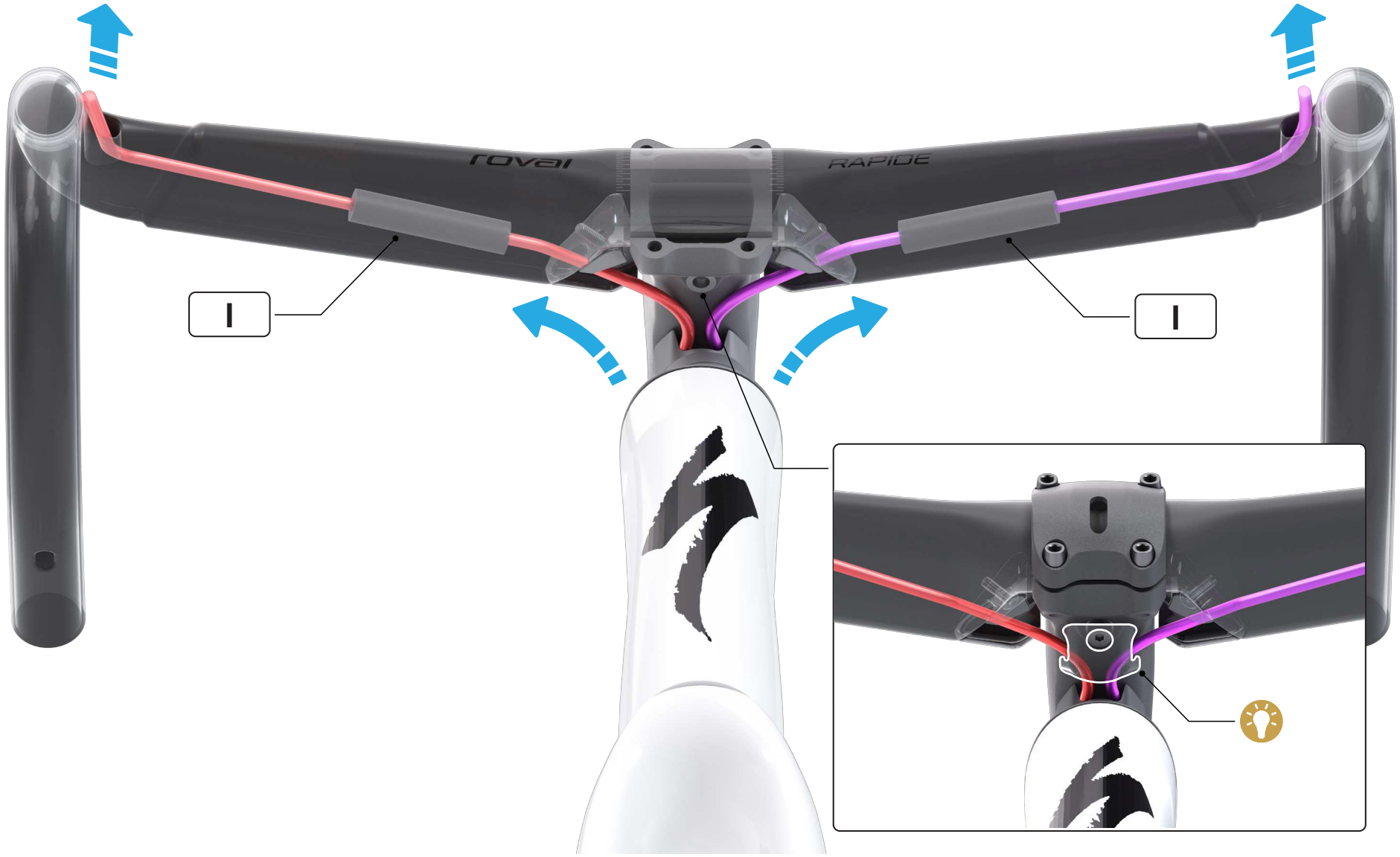

Securing brake hoses under the cable bat prior to installation of the brake / shifter levers makes this process easier.

8.3. Handlebar and stem faceplate



WARNING! The SL7 stem is designed with no gap between the stem body and the faceplate at the upper bolt area. The upper bolts must be tightened such that the faceplate bottoms out against the stem body before being torqued. Failure to bottom out the faceplate against the stem body can result in structural damage to the handlebar.

9. ROVAL RAPIDE COCKPIT HEADSET

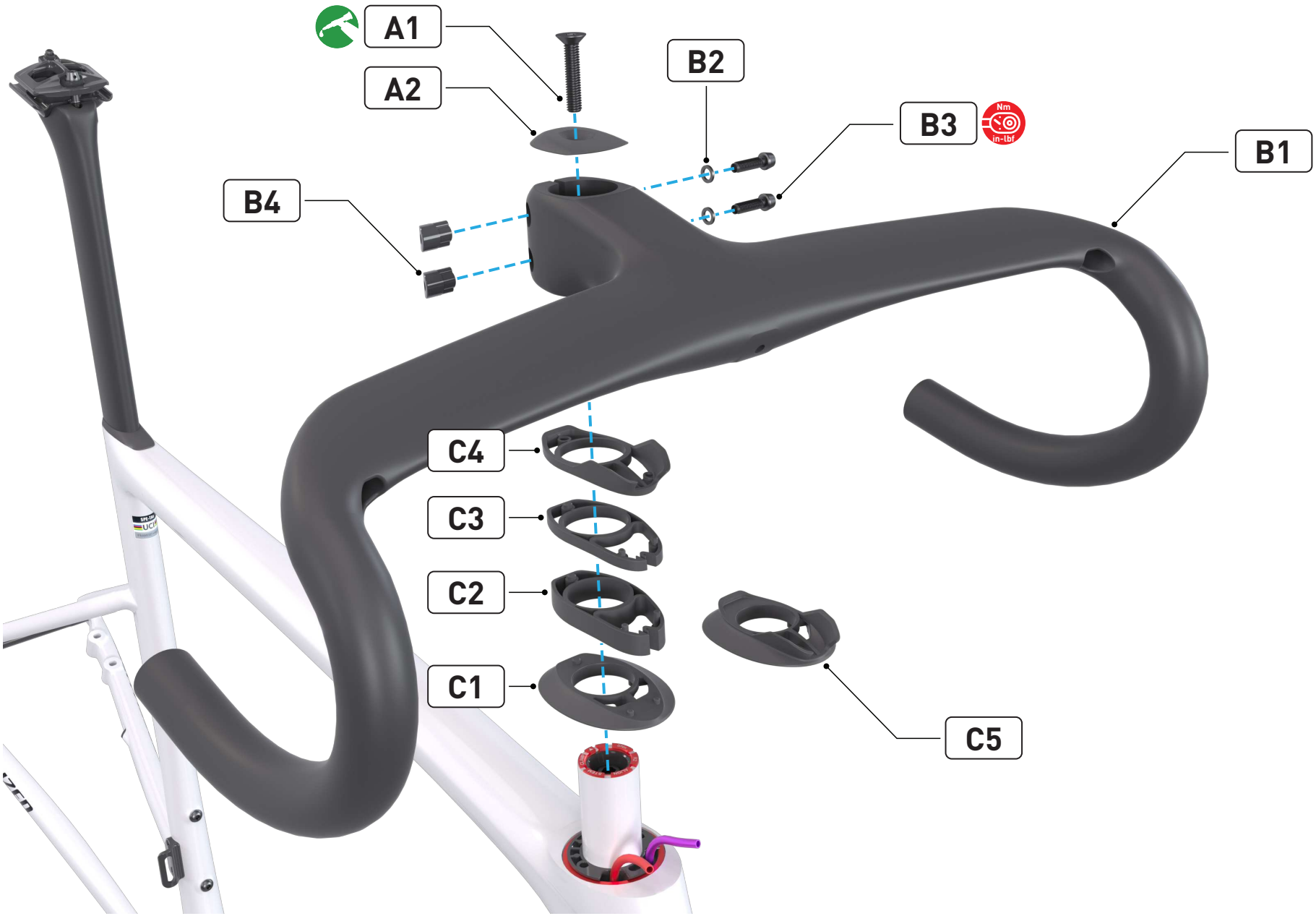

The SL7 stem and Roval Rapide cockpit have a maximum spacer/transition stack of 1 x lower transition spacer, 3 x 10 mm spacers, 1 x 5 mm spacer, and 1 x upper transition spacer.

	DESCRIPTION		QTY	PART	COMPONENT SIZE	TOOL SIZE	TORQUE	
							Nm	in-lbf
A	**Roval Rapide cockpit top cap and bolt**	1. compression bolt	1	S222500008	M6 x 30 mm x 1 pitch	4 mm hex	–	–
		2. top cap	1		N/A	4 mm hex	–	–
B	**Roval Rapide cockpit**	1. cockpit	1	see (**Bb**)	see (**Bb**)	N/A	–	–
		2. washers	2		7.9 mm OD x 4.7 mm ID x 1 mm H	N/A	–	–
		3. steerer clamp bolts	2		M5 x 18 mm x 0.8 pitch	4 mm hex	5	44
		4. steerer clamp nuts	2		M5 x 6.5 mm x 0.8 pitch (custom)	4 mm hex	5	44
C	**Roval Rapide cockpit headset / spacer kit**	1. lower transition	1	S222500010	N/A	N/A	–	–
		2. large spacer	3		10 mm	N/A	–	–
		3. small spacer	1		5 mm	N/A	–	–
		4. upper transition	1		N/A	N/A	–	–
		5. one piece transition	1		N/A	N/A	–	–
D	**Foam sleeve "churro"**	internal handlebar routing	2	S149900018	50 mm x 11 mm OD	N/A	–	–

	DESCRIPTION			PART
Bb	**Roval Rapide cockpit**	–	(frame size 44 and 49) 31.8 mm x 380 mm x 75 mm	21023-0612
			(frame size 44 and 49) 31.8 mm x 380 mm x 90 mm	21023-0613
			(frame size 44 and 49) 31.8 mm x 380 mm x 115 mm	21023-0616
			(frame size 51) 31.8 mm x 400 mm x 90 mm	21023-0623
			(frame size 51) 31.8 mm x 400 mm x 100 mm	21023-0624
			(frame size 51) 31.8 mm x 400 mm x 110 mm	21023-0625
			(frame size 51) 31.8 mm x 400 mm x 120 mm	21023-0626
			(frame size 51) 31.8 mm x 400 mm x 135 mm	21023-0628
			(frame size 54 and 56) 31.8 mm x 420 mm x 90 mm	21023-0633
			(frame size 54 and 56) 31.8 mm x 420 mm x 100 mm	21023-0634
			(frame size 54 and 56) 31.8 mm x 420 mm x 110 mm	21023-0635
			(frame size 54 and 56) 31.8 mm x 420 mm x 120 mm	21023-0636
			(frame size 54 and 56) 31.8 mm x 420 mm x 135 mm	21023-0638
			(frame size 58 and 61) 31.8 mm x 440 mm x 110 mm	21023-0645
			(frame size 58 and 61) 31.8 mm x 440 mm x 125 mm	21023-0647

9.1. Roval Rapide cockpit transition and spacer routing

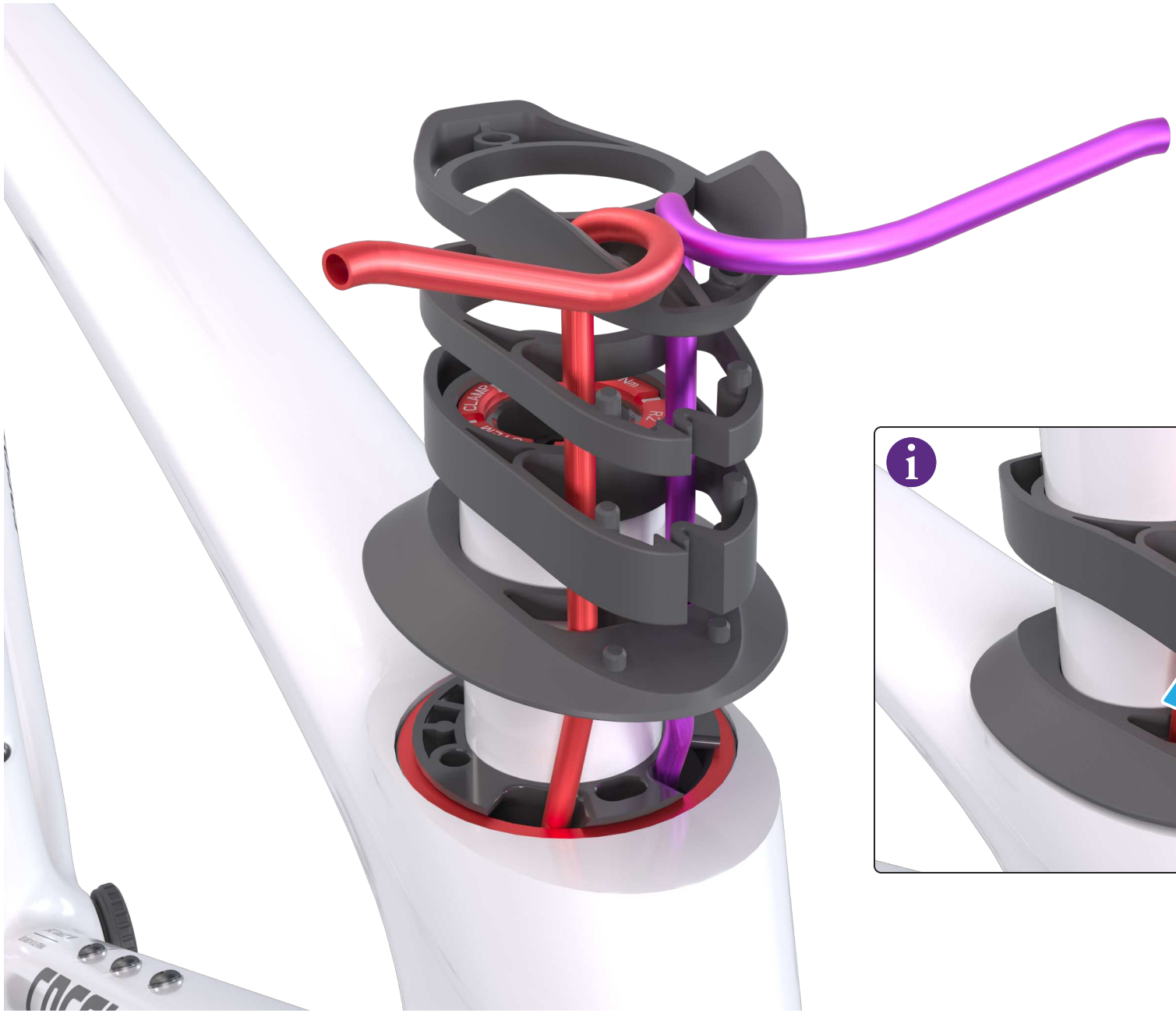

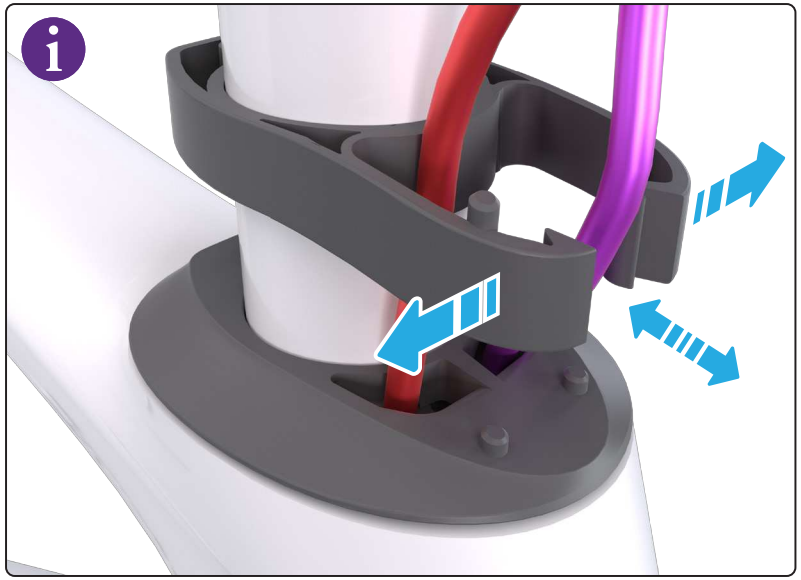

The spacers are split so they can be installed or removed to adjust stack height without removing the hoses. To do this, engage the clip, install the spacer on the steerer tube, then vertically slide the clip together.

9.2. Roval Rapide cockpit handlebar routing



From when they exit the steerer tube to when they enter the handlebar, the brake hoses must not cross each other. If the rear brake lever is on the right, then the rear brake hose exits the head tube on the right and remains on that side until it enters the right handlebar port.

10. SPECIALIZED ACCESSORY MOUNT

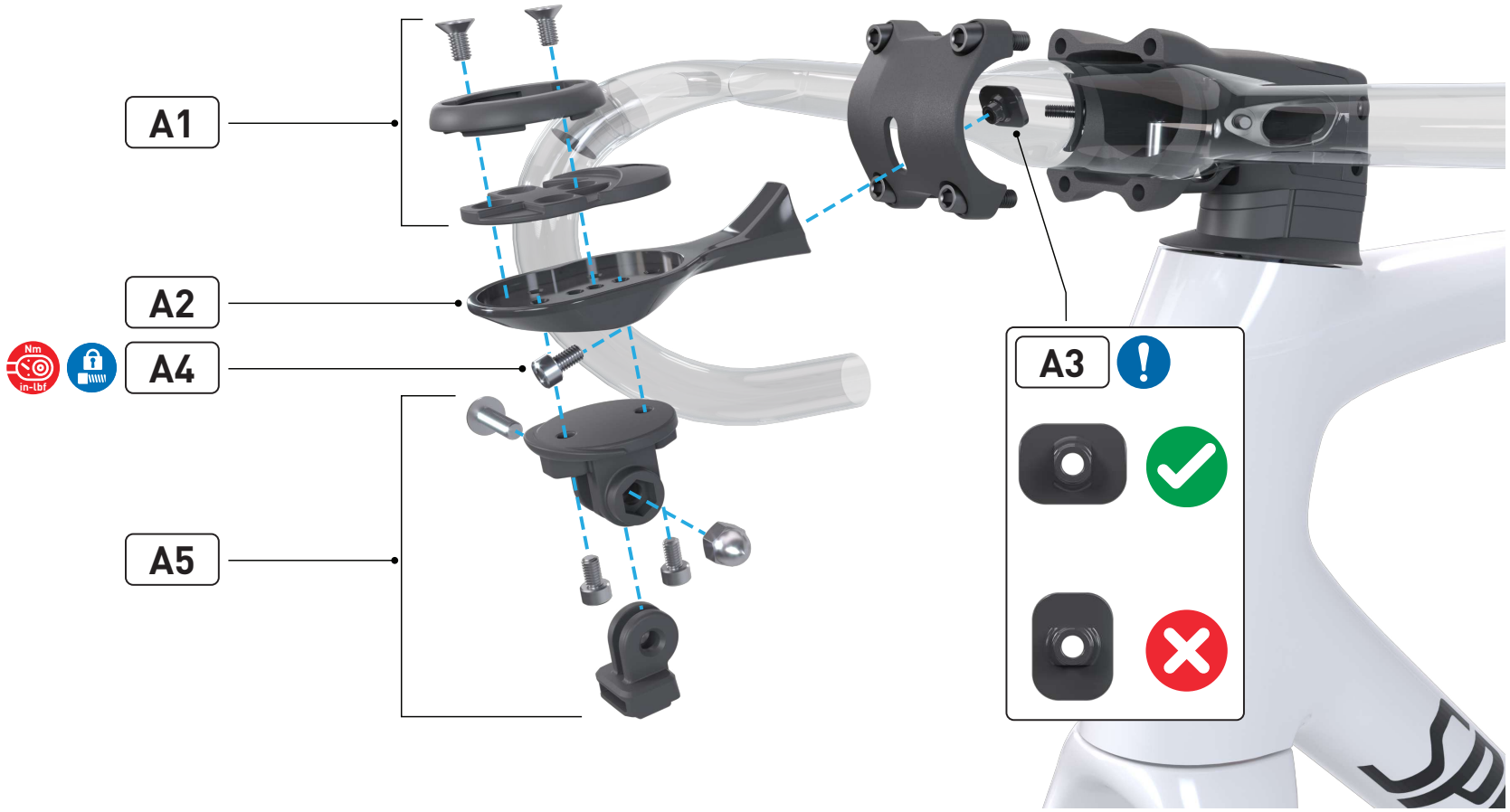

CAUTION: The orientation of the mounting plate is critical to the structural integrity of the stem and handlebar. If the plate is installed vertically, it does not seat properly and can cause damage to the handlebar once torqued to specification.

	DESCRIPTION		QTY	PART	COMPONENT SIZE	TOOL SIZE	TORQUE	
							Nm	in-lbf
A	**Specialized accessory mount**	1. upper attachments	–	S219900020	–	N/A	–	–
		2. mounting arm	1		–	N/A	–	–
		3. mounting plate	1		–	N/A	–	–
		4. mounting bolt	1		M4 x 7 mm x 0.7 mm pitch	3 mm hex	2.7	24
		5. lower attachments	–		–	N/A	–	–

11. ROVAL RAPIDE COCKPIT ACCESSORY MOUNT

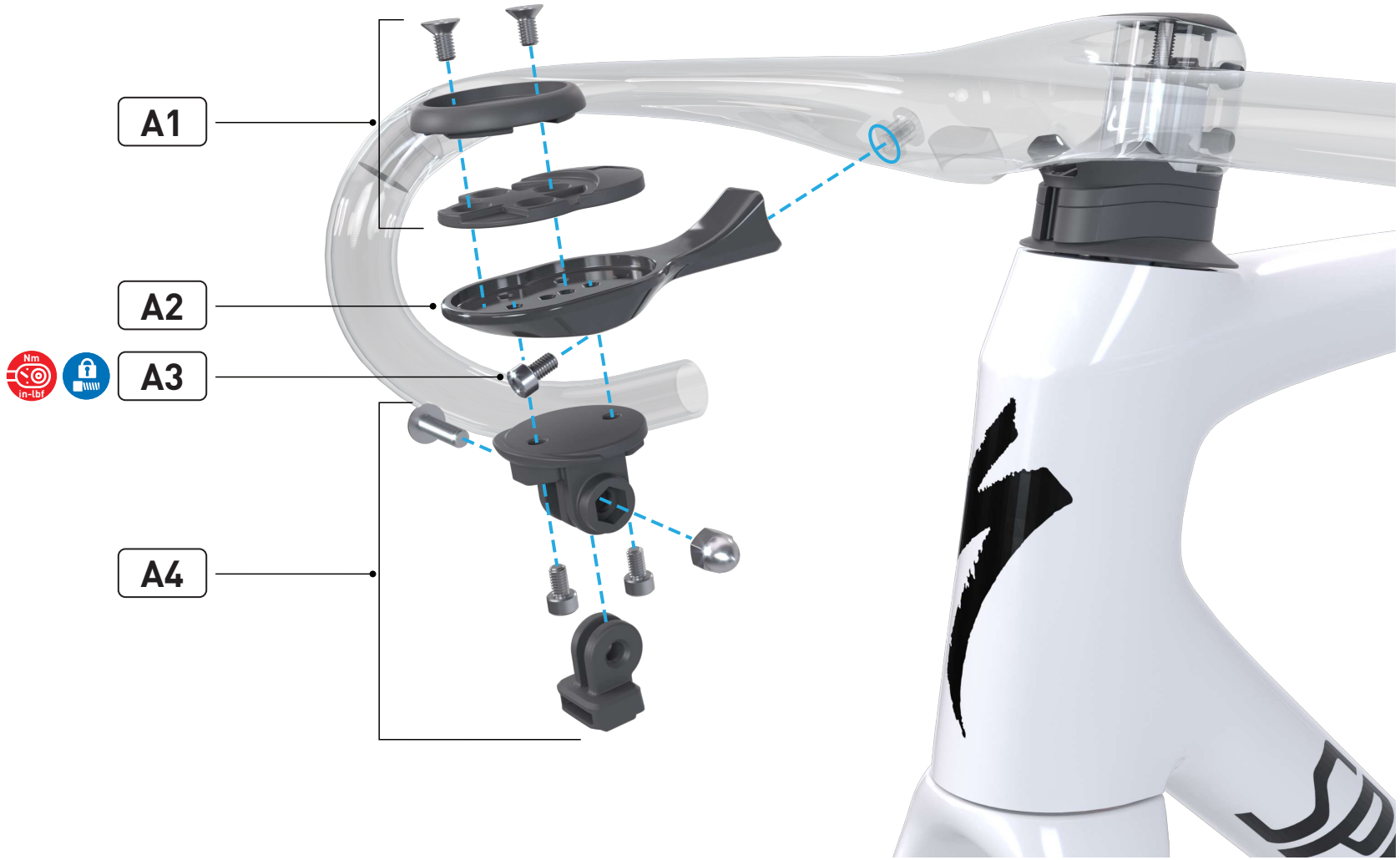

	DESCRIPTION		QTY	PART	COMPONENT SIZE	TOOL SIZE	TORQUE	
							Nm	in-lbf
A	**Roval Rapide cockpit accessory mount**	1. upper attachments	–	S219900021	–	N/A	–	–
		2. mounting arm	1		–	N/A	–	–
		3. mounting bolt	1		M4 x 7 mm x 0.7 mm pitch	3 mm hex	2.7	24
		4. lower attachments	–		–	N/A	–	–

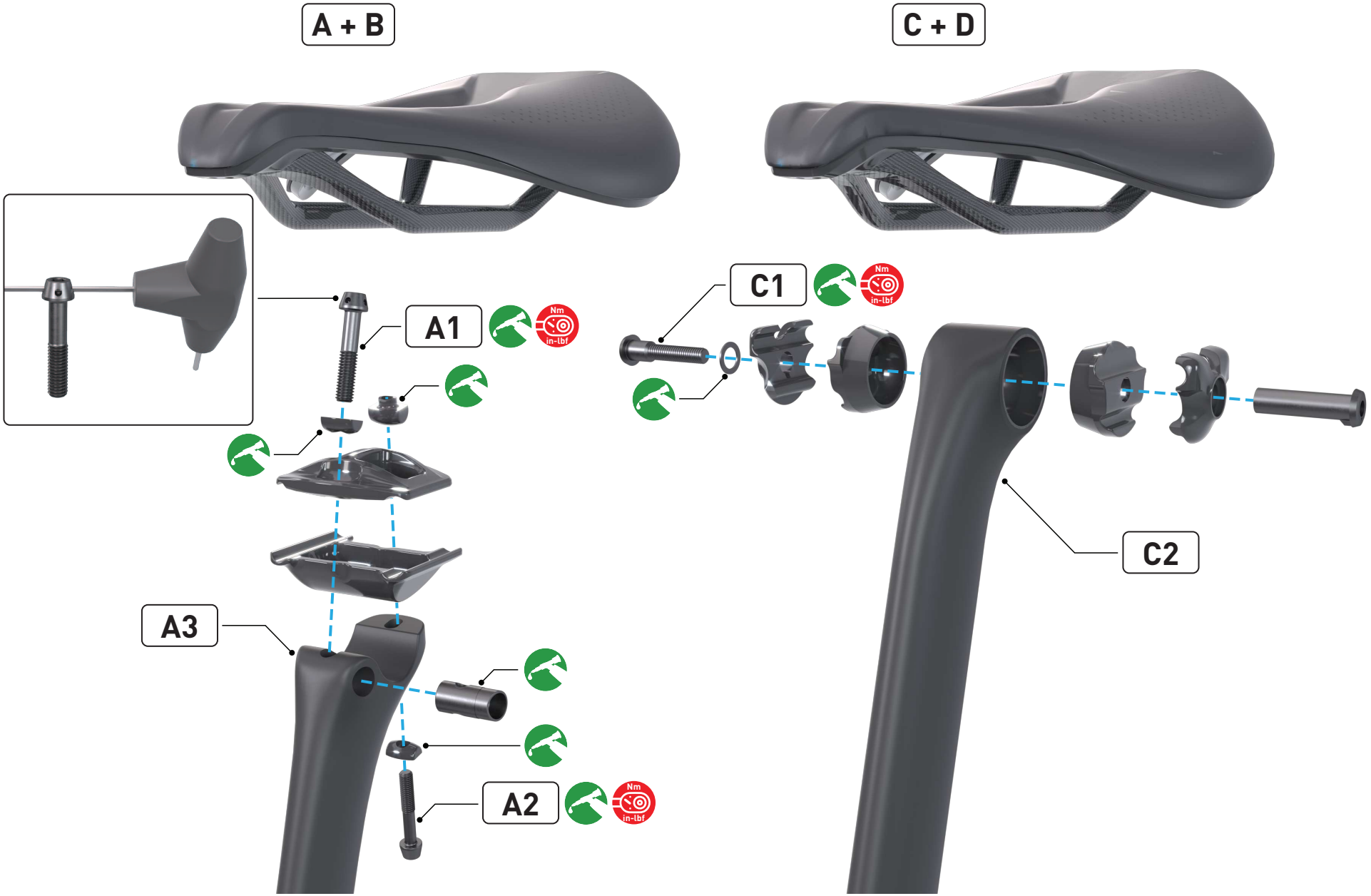
A + B
C + D
A1
A2
A3
C1
C2
Nm
in-lbf

	DESCRIPTION		QTY	PART	COMPONENT SIZE	TOOL SIZE	TORQUE	
							Nm	in-lbf
A	**S-Works seatpost**	1. front bolt	1	28123-4105	M6 x 30 mm x 1 mm pitch (4 x 2 mm holes)	4 mm hex	3.1	27.4
		2. rear bolt	1		M5 x 30 mm x 0.8 mm pitch	4 mm hex	6.1	53.9
		3. seatpost	1		300 mm x 15 mm offset	N/A	–	–
B	**S-Works seatpost**	1. front bolt	1	28123-4115	M6 x 30 mm x 1 mm pitch (4 x 2 mm holes)	4 mm hex	3.1	27.4
		2. rear bolt	1		M5 x 30 mm x 0.8 mm pitch	4 mm hex	6.1	53.9
		3. seatpost	1		380 mm x 15 mm offset	N/A	–	–
C	**S-Works seatpost**	1. single bolt	1	28123-4100	M6 x 37 mm x 1 mm pitch	5 mm hex	13.6	120.3
		2. seatpost	1		300 mm x 0 mm offset	N/A	–	–
D	**S-Works seatpost**	1. single bolt	1	28123-4110	M6 x 37 mm x 1 mm pitch	5 mm hex	13.6	120.3
		2. seatpost	1		380 mm x 0 mm offset	N/A	–	–
E	**Alpinist seatpost clamp kit**	upper and lower clamps kit	1	S204900004	–	N/A	–	–
F	**Saddle rail clamp bolt**	–	1	2812-9050	7 mm / 9 mm	N/A	–	–

NOTES

12.1. Di2 Battery (optional)



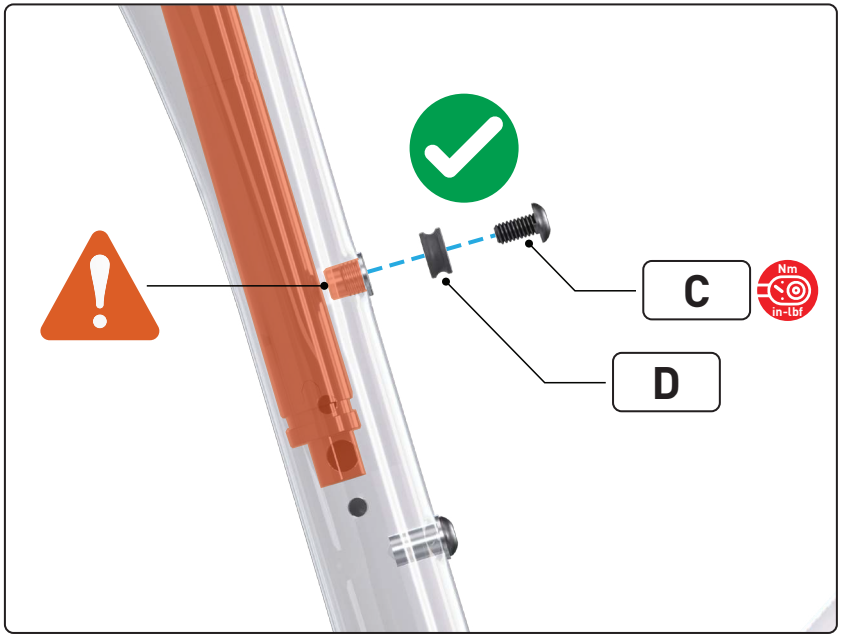

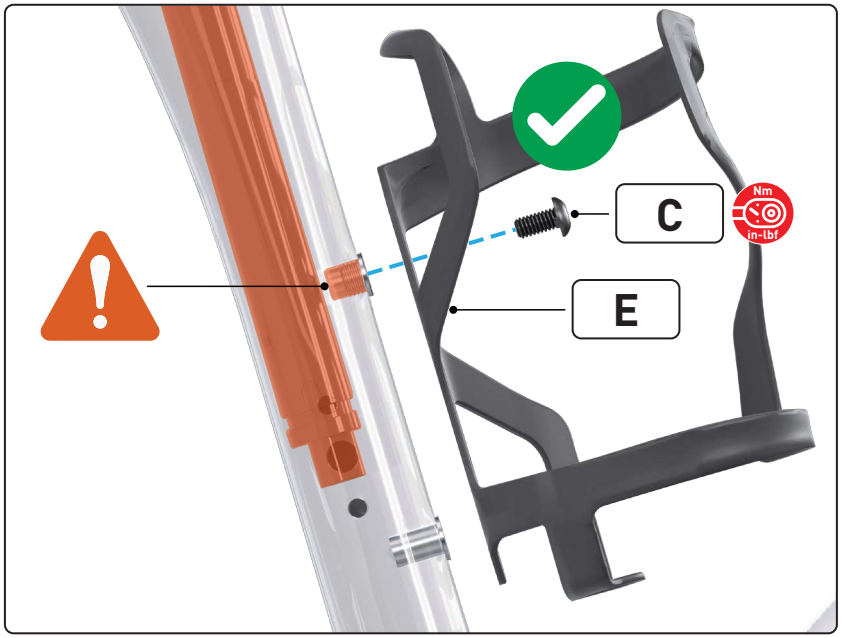

	DESCRIPTION		QTY	PART	COMPONENT SIZE	TOOL SIZE	TORQUE	
							Nm	in-lbf
A	**Di2 Battery mount**	–	1	S224900036	N/A	N/A	–	–
B	**S-Works water bottle cage bolts**	longer bolt (not shown)	3	S220500004	M5 x 16 mm x 0.8 mm pitch	3 mm hex	2.8	24.7
C	**S-Works water bottle cage bolts**	shorter bolt	2	S230500005	M5 x 10 mm 0.8 mm pitch	3 mm hex	2.8	24.7
D	**Water bottle cage spacer**	–	1	S235600001	11 mm OD x 5.2 mm ID x 5 mm H	N/A	–	–
E	**Water bottle cage**	–	–	–	N/A	N/A	–	–

WARNING! In certain sized bicycles, the Di2 battery may come in contact with the top seat tube water bottle bolt, if the bolt is inserted too deeply without a spacer installed. Use the provided 10 mm water bottle cage bolts (S230500005) and a 5 mm spacer (S235600001) on the top bolt if no water bottle cage is installed.

NOTES

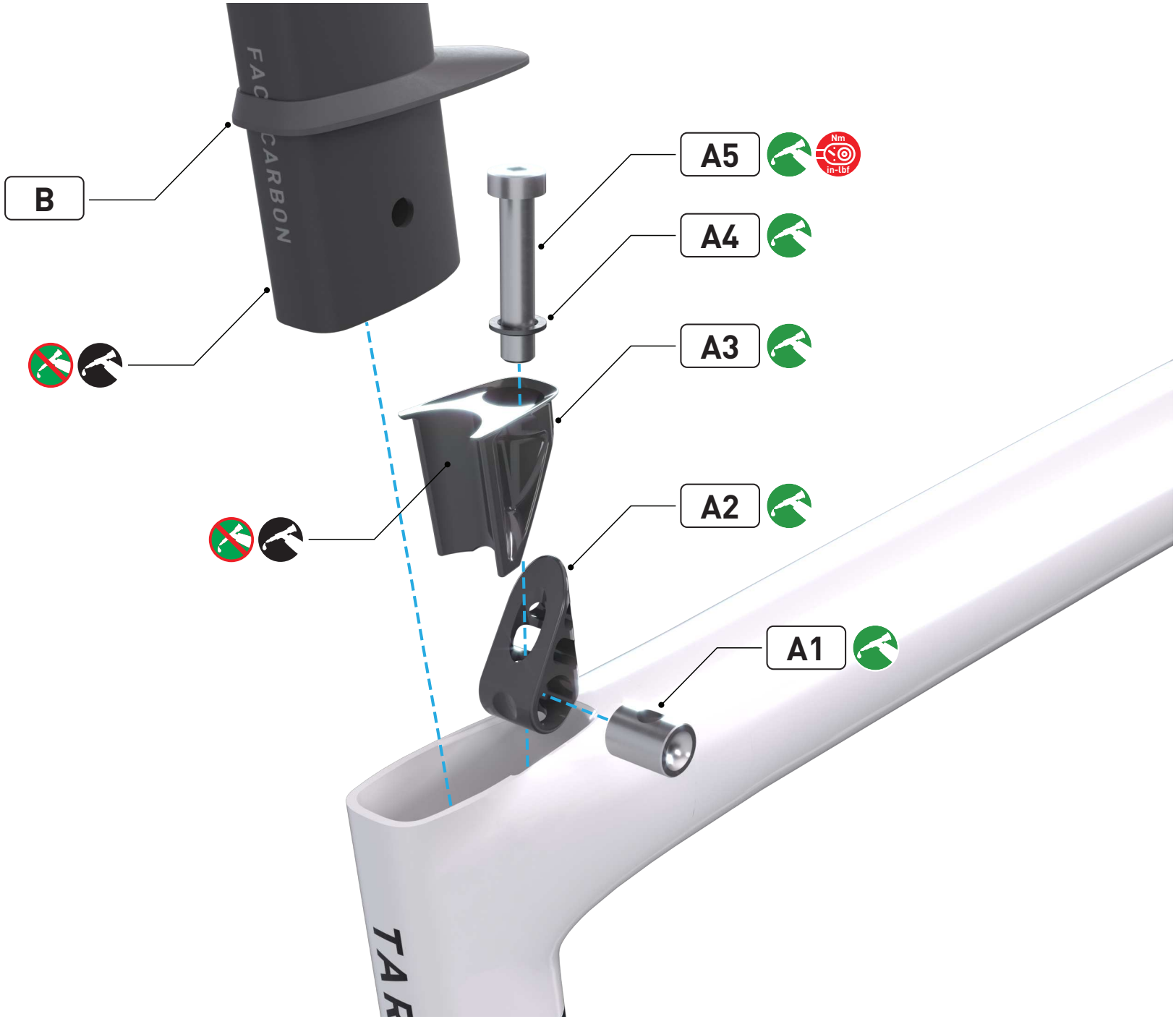
B
A5
Nm
in-lbf
A4
A3
A2
A1

	DESCRIPTION		QTY	PART	COMPONENT SIZE	TOOL SIZE	TORQUE	
							Nm	in-lbf
A	**Seatpost wedge binder**	1. barrel nut	1	S224700012	(M6 x 1 mm pitch) 10 mm OD x 13 mm	N/A	–	–
		2. lower wedge	1		N/A	N/A	–	–
		3. upper wedge	1		N/A	N/A	–	–
		4. washer	1		10 mm OD x 6.2 mm ID x 1.6 mm	N/A	–	–
		5. wedge bolt	1		M6 x 30 mm x 1 mm pitch	4 mm hex	6.2	54.8
B	**Seatpost wedge cover**	–	1	S224700011	N/A	N/A	–	–

WARNING! Before tightening the seatpost wedge clamp, it is important to make sure it's fully seated inside the seat tube in front of the seatpost.

CAUTION: When inserting the seatpost, be careful not to pinch any Di2 cables.

CAUTION: When removing the seatpost, loosen but do not remove the wedge clamp bolt. Fully loosening the bolt and removing the seatpost could lead to the lower wedge and barrel nut falling into the seat tube.

NOTES

12.3. Seatpost minimum / maximum insertion depths

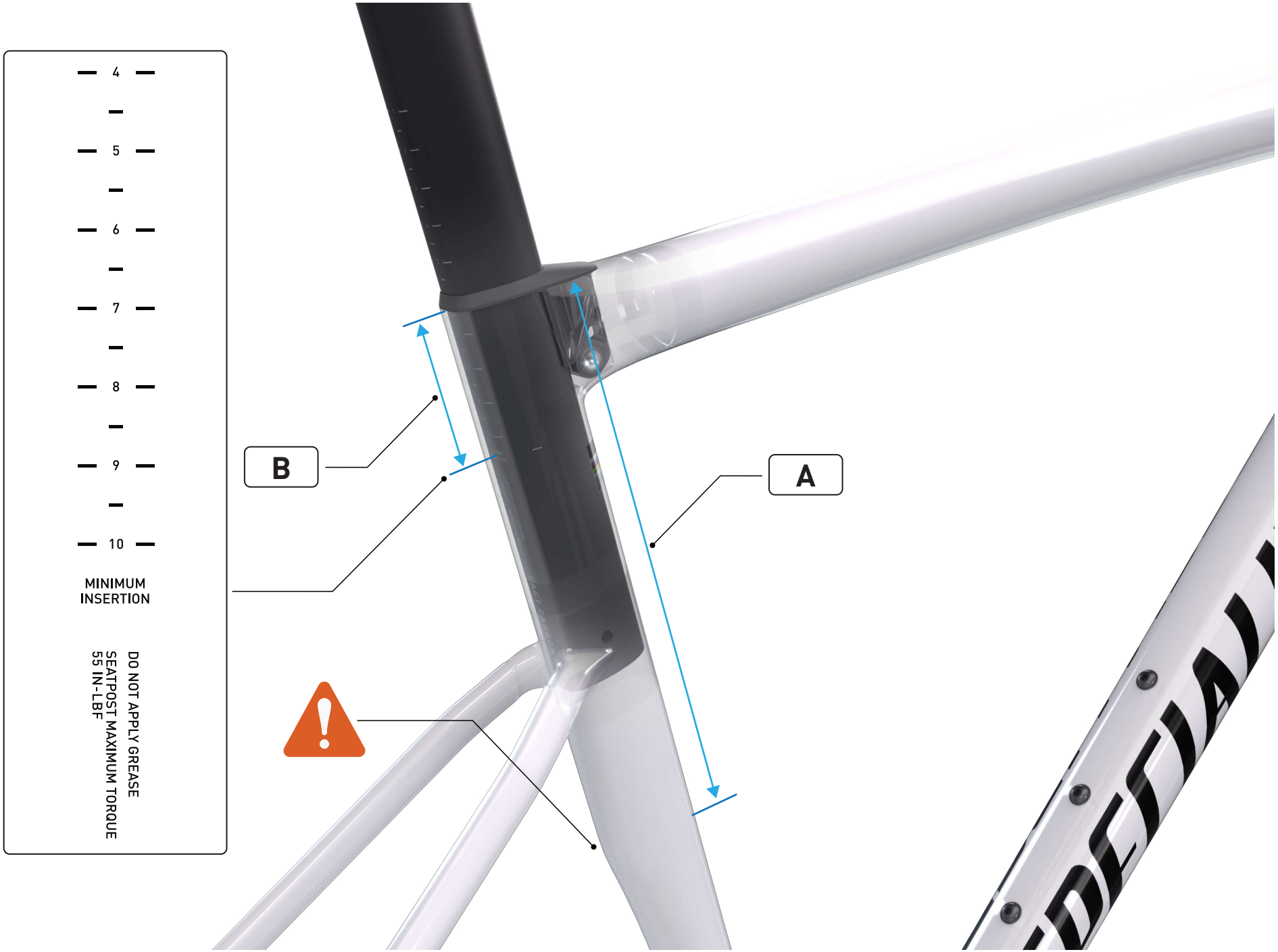

	Frame size	44	49	52	54	56	58	61
A	Maximum insertion (mm)	121	133	144	161	182	203	233
B	Minimum insertion (mm)	75 mm						

WARNING! When inserting the seatpost, there should be sufficient space between the bottom end of the seatpost and the contour so as to not cause any structural damage to the frame.

NOTES

13. SHIMANO DI2 CABLE ROUTING

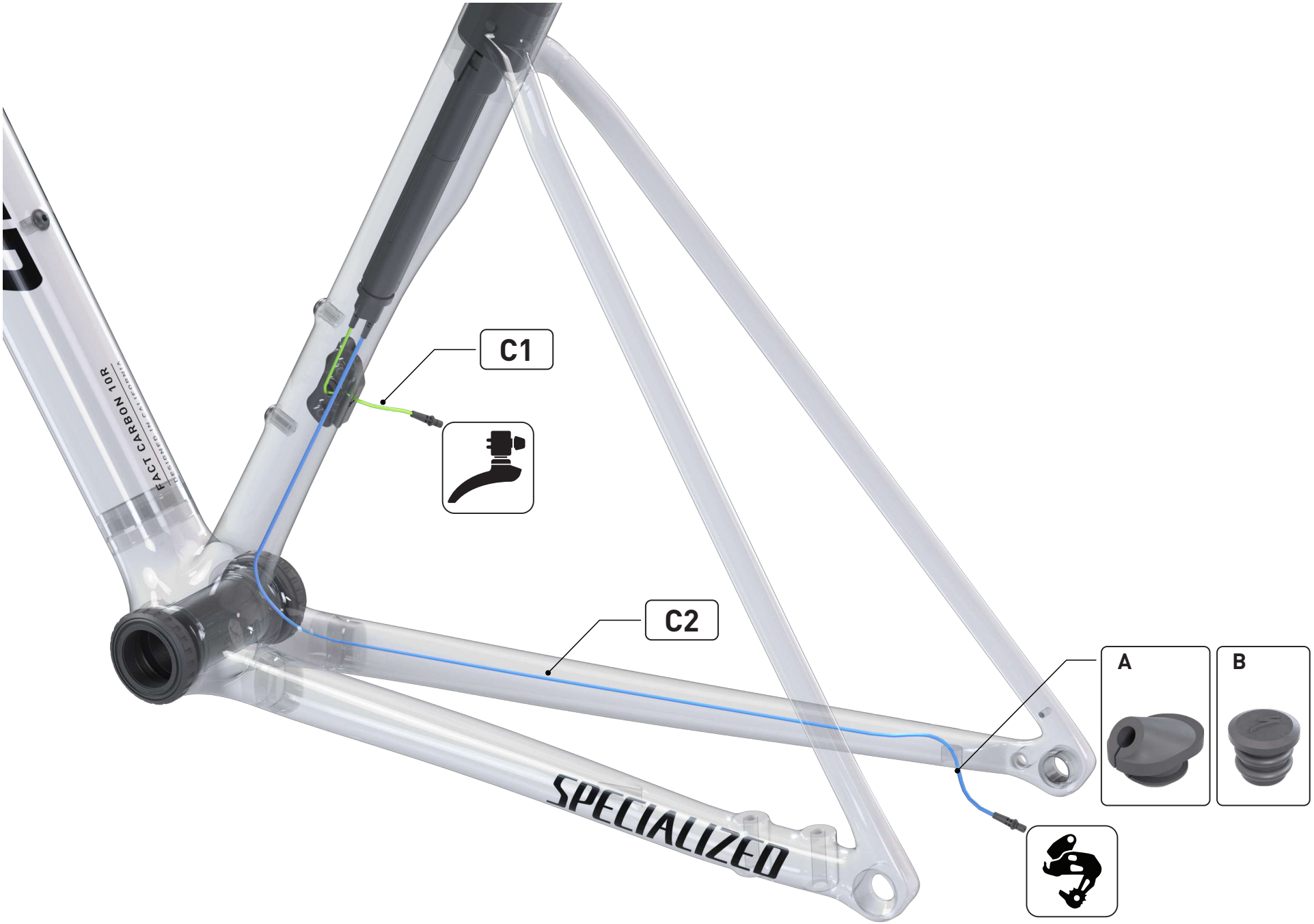

	DESCRIPTION		QTY	PART	COMPONENT SIZE	TOOL SIZE	TORQUE	
							Nm	in-lbf
A	**Di2 grommet**	rear derailleur ICR grommet	1	S226500010	6 mm OD x 2.4 mm ID x 8.5 mm H	N/A	–	–
B	**Wireless plug**	SRAM shifting / 1x front chainring	2	S179900015	7 mm OD x 4 mm ID x 8.5 mm H	N/A	–	–
C	**Shimano Di2 cables**	1. front derailleur - battery	1	–	600 mm x 2 mm OD (connector plug 5 mm OD)	N/A	–	–
		2. rear derailleur - battery	1	–	1200 mm x 2 mm OD (connector plug 5 mm OD)	N/A	–	–
D	**Front derailleur cover**	1x front chainring	1	S201900002	–	N/A	–	–
E	**Front derailleur mounting kit**	1. mounting bolts	2	S221900002	M4 x 14 mm x 0.7 mm pitch	2.5 mm hex	2	17.7
		2. front derailleur hanger	1		–	N/A	–	–
		3. front derailleur block off plate	1		–	N/A	–	–
		4. front derailleur grommet	1		7.5 mm OD x 5.5 mm ID x 9.2 mm H	N/A	–	–

CAUTION: Do not pinch the Di2 cable when assembling the front derailleur hanger.

If using an 11 speed Di2 system, junction A is housed in handlebar. Route the wires according to the manufacturer's instructions.

NOTES

13.1. Front derailleur hanger install

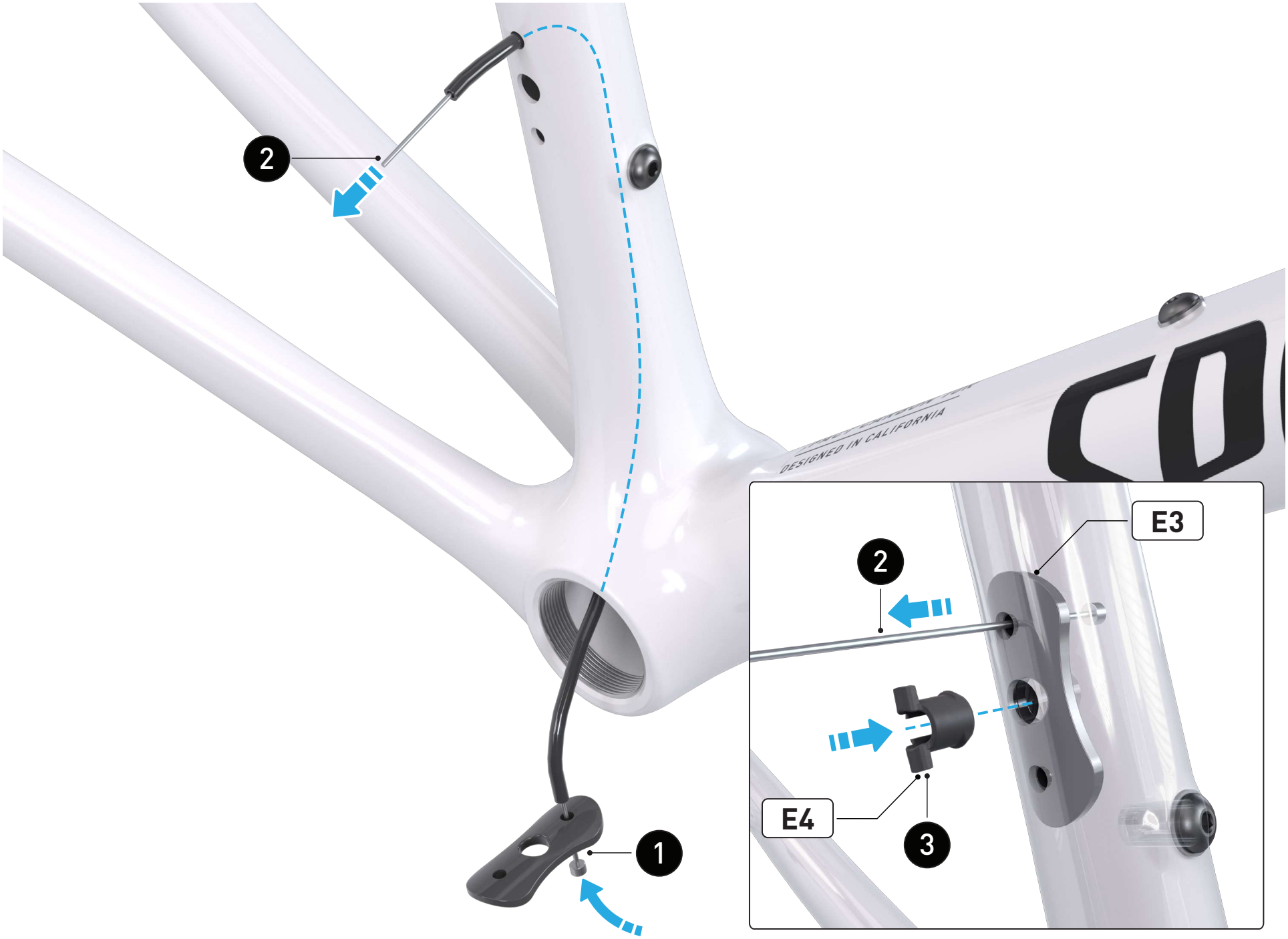

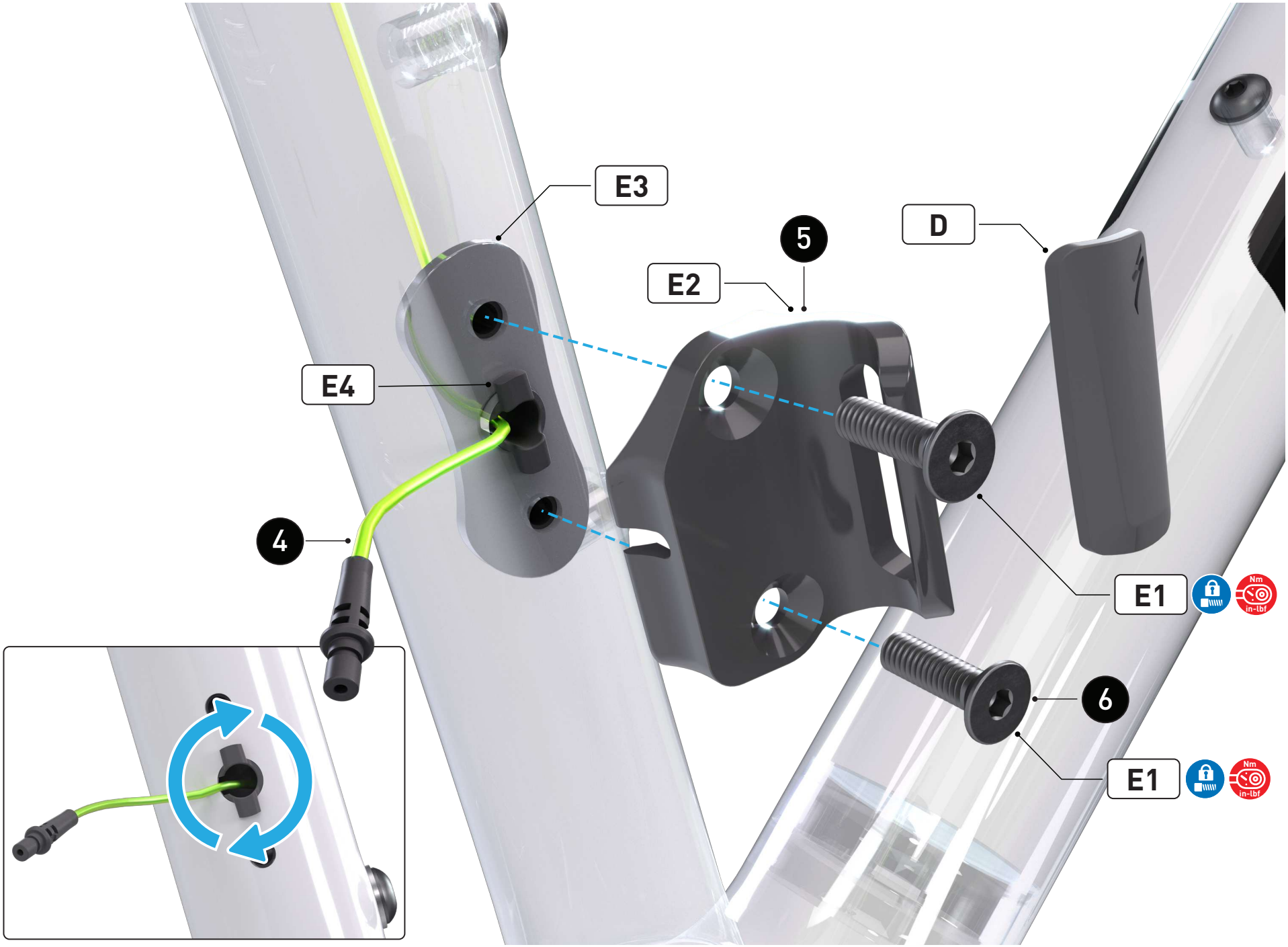
E3
5
D
E2
E4
4
E1
6
E1

14. REAR DERAILLEUR HANGER



	DESCRIPTION		QTY	PART	COMPONENT SIZE	TOOL SIZE	TORQUE	
							Nm	in-lbf
A	**Rear derailleur hanger (lightweight)**	1. mounting bolt	1	S206000001	M5 x 10 mm x 0.8 mm pitch	4 mm hex	4.5	39.8
		2. hanger	1		–	N/A	–	–
B	**Rear derailleur hanger**	1. mounting bolt	1	S182600001	M5 x 10 mm x 0.8 mm pitch	4 mm hex	4.5	39.8
		2. hanger	1		–	N/A	–	–

15. REPLACEMENT PARTS AND ACCESSORIES

Please refer to the below table as well as the **4. Specifications** section of this manual to refer to any tools, tool specs, torque specs, and service part numbers.

	DESCRIPTION		QTY	PART	COMPONENT SIZE	TOOL SIZE	TORQUE	
							Nm	in-lbf
A	Roval tubeless valve	Rapide CLX TL	1	S225500010	70 mm	N/A	–	–
		Rapide CLX TL	1	S225500011	80 mm	N/A	–	–
B	SRAM XD-R, alloy star ratchet		1	S192100010	FHB DT Swiss, TA, SRAM XD-R, alloy, star ratchet, w/ end cap (HWYAAX00S8888S)	N/A	–	–
C	Shimano 11-speed road, alloy, ratchet		1	S202100003	FHB DT Swiss, TA, Shimano 11-spd road, alloy, ratchet exp, w/ end cap (HWYABL00E8652S)	N/A	–	–
D	SRAM XD-R, alloy, ratchet		1	S202100007	FHB DT Swiss, TA, SRAM XD-R, alloy, ratchet exp, w/ end cap (HWYABL00E8650S)	N/A	–	–
E	Shimano 11-speed road, alloy, star ratchet		1	S202100012	FHB DT Swiss, Shimano 11-spd road, alloy, star ratchet, w/o end cap (HWRABL00R2775S)	N/A	–	–
F	SW Tarmac SL8 frame decal kit		1	S231800001	DCL MY24 SW Tarmac SL8, frame decal kit, CARB/ CMLNSNKEYE, 44/49cm	N/A	–	–
G	SW Tarmac SL8 frame decal kit		1	S231800002	DCL MY24 SW Tarmac SL8, frame decal kit, CARB/ CMLNSNKEYE, 52/54cm	N/A	–	–
H	SW Tarmac SL8 frame decal kit		1	S231800003	DCL MY24 SW Tarmac SL8, frame decal kit, CARB/ CMLNSNKEYE, 56/58/61cm	N/A	–	–

SPECIALIZED®

SPECIALIZED BICYCLE COMPONENTS
15130 Concord Circle, Morgan Hill, CA 95037 (408) 779-6229